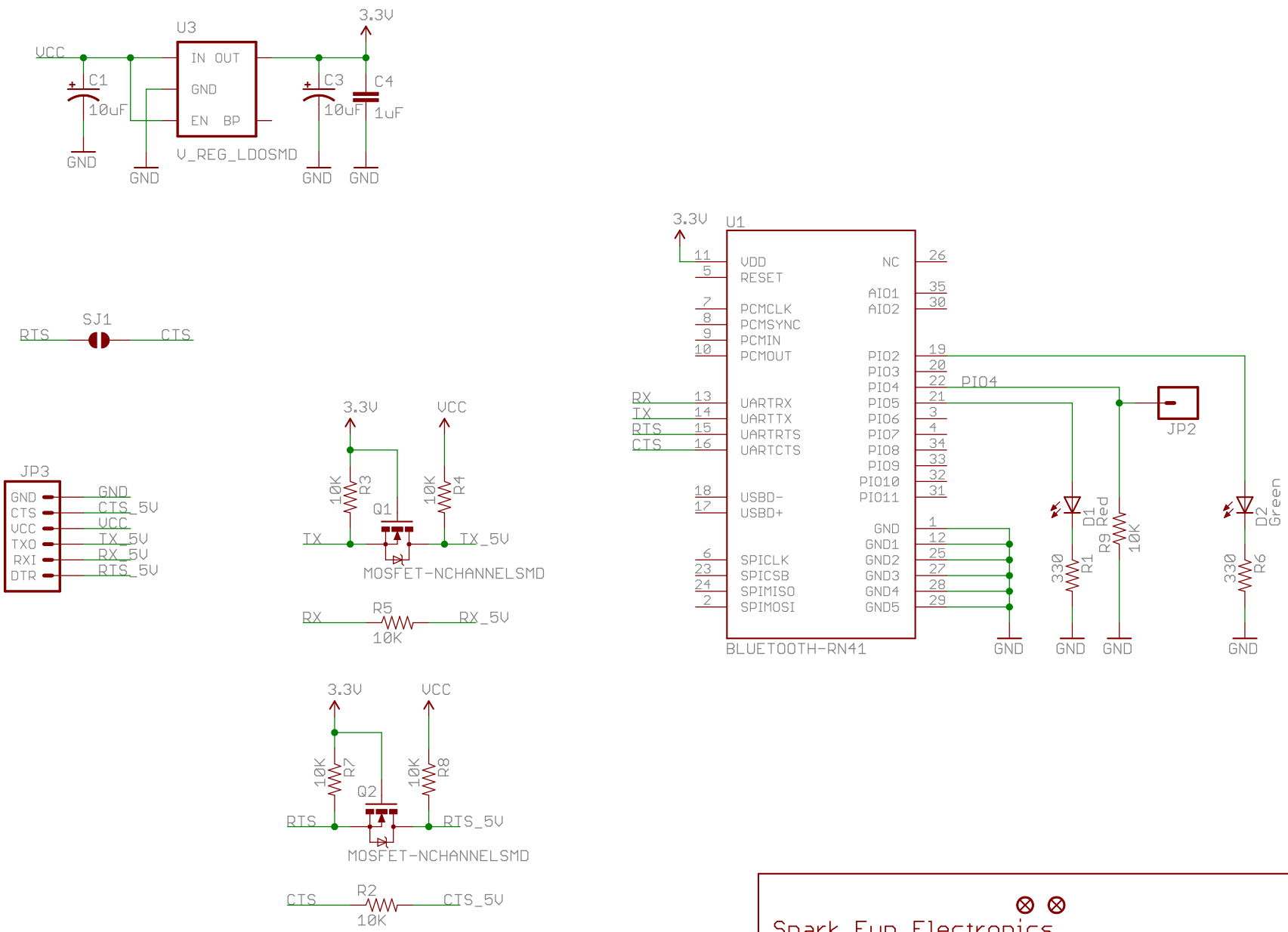

Spark Fun Electronics

TITLE: ArduinoBluetoothMatev13	SFE
Document Number:	REV:
Date: 10/31/2009 4:23:41 PM	Sheet: 1/1